Troop 2
as of March 2010

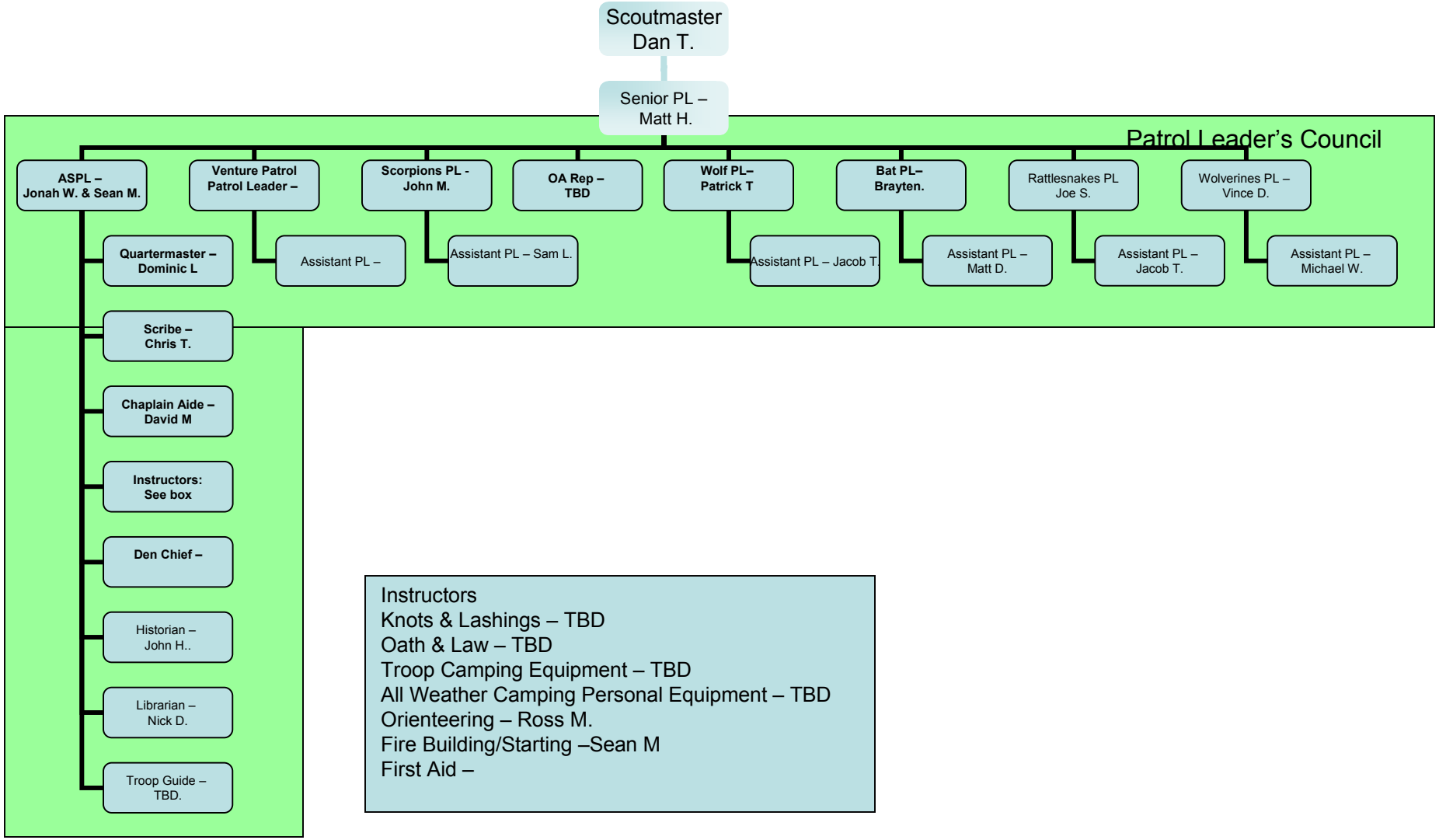

Instructors
Knots & Lashings – TBD
Oath & Law – TBD
Troop Camping Equipment – TBD
All Weather Camping Personal Equipment – TBD
Orienteering – Ross M.
Fire Building/Starting –Sean M
First Aid –